Everglow Led Lighting
ABN: 41 613 557 583
PH: 1300 133 471 FAX: 03 9532 1377
E-mail: info@everglowlighting.com.au
6/20-26 Sullivan Street, Moorabbin, VIC 3189

7W RECESSED ADJUSTABLE TELESCOPIC LIGHT

Product Features

- Commercial grade quality and design
- Made with LM-80 certified COB Led chips
- Incl. remote driver and flex cord and plug
- Adjustable 90 degree
- CCT changeable

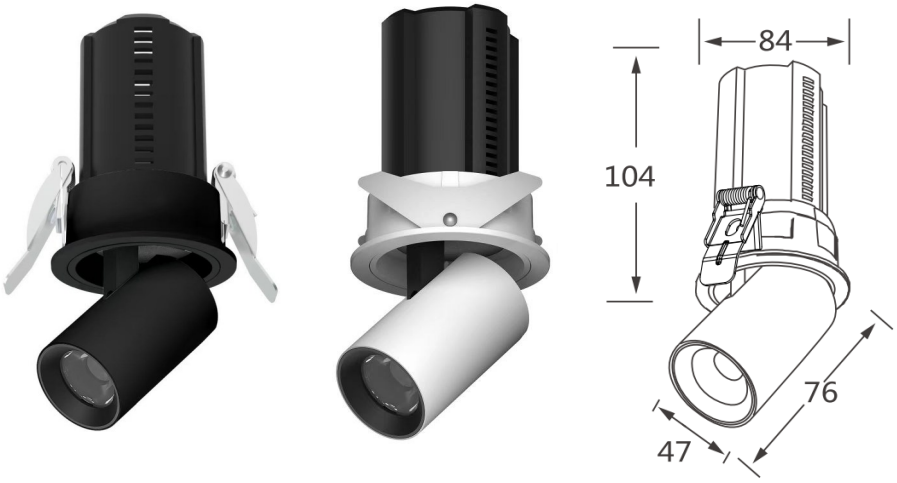

Technical Specification

Model	SE-DL-V324-7W-WH-TC
Watts	7W
Input Voltage	AC 240V 50/60Hz
LED Chip	SMD LED
Colour Temp.	3000K /4000K/5000K / 5700K
Lumens Output	560lm
CRI	Ra>90
Beam Angle	60°
Size	Ø84* H104mm
Cutout	Ø75mm
IP Grade	IP 20
Dimmable	Trialing Edge Dimmer
Housing Colour	White / Black

* The information in this datasheet may be changed by Everglow Lighting at any time without prior notice.